SUMMER MAINTENANCE EQUIPMENT

EFFICIENCY, DURABILITY, SIMPLICITY AND SAFETY ARE THE KEY FEATURES OF THE PROFESSIONAL RASCO EQUIPMENT FOR SUMMER MAINTENANCE OF TRAFFIC INFRASTRUCTURE.

RASCO

RINSCO

RASCO

The smart choice

RASCO is one of the leading European manufacturers of equipment for the maintenance of traffic infrastructure. The company's line of products is comprised of devices for summer and winter maintenance. All products from the RASCO product program have been developed based on 25 years of experience in the production of equipment for the maintenance of traffic infrastructure.

The key features of RASCO devices include efficiency, durability, simplicity and safety. They are included in the process of development and production of professional RASCO equipment for summer road maintenance, which encompasses crane mowers and attachments, as well as brushes and washers for road cleaning. Efficiency, durability, simplicity and safety are implemented through a range of functional characteristics of RASCO crane mowers and attachments, such as the design of hydraulic arms, multiple safety mechanisms, simple control, fast and safe mounting and a wide choice of additional options.

Today, professional RASCO equipment is used for summer maintenance of the traffic infrastructure in over 30 countries. Proven reliability in the most extreme conditions of the maintenance of traffic infrastructure in Europe and North and Central Asia with the ensured post-sales support makes RASCO equipment for summer maintenance of the traffic infrastructure using a smart choice.

CRANE MOWERS

#	MOWER	REACH [mm]						VEHICLE TYPE			MOUNTING PLACE			PURPOSE		
		5000	6000	7000	8000	9000	10 000									
12	**BRK**		•	•					•			•		•	•	•
14	**BRKT**				•				•			•		•		•
16	**MAXIMA**				•	•	•		•			•				•
20	**SPECTRA**		•	•					•				•	•	•	
22	**FLEXIMA**	•							•				•	•	•	
24	**NEVA**	•	•						•				•	•	•	•
28	**PRK**		•					•			•			•		
30	**PRKV**		•							•	•			•		

ATTACHMENTS

36	Mowing head **HYDRA**
37	Mowing head **TORNADO**
38	Side brush **BM**
39	Ditch cleaner **KAN**
39	Branch cutter **SRG**

OTHER EQUIPMENT

44	Roadway brush **MKN**
46	Washing device **PL**

Front of the vehicle · Rear end of the vehicle · Side of the vehicle · Forest areas · Surfaces by the side of road · Surfaces by the side of banks

NECESSARY CHARACTERISTICS OF VEHICLES SUITABLE FOR THE MOUNTING OF RASCO CRANE MOWERS

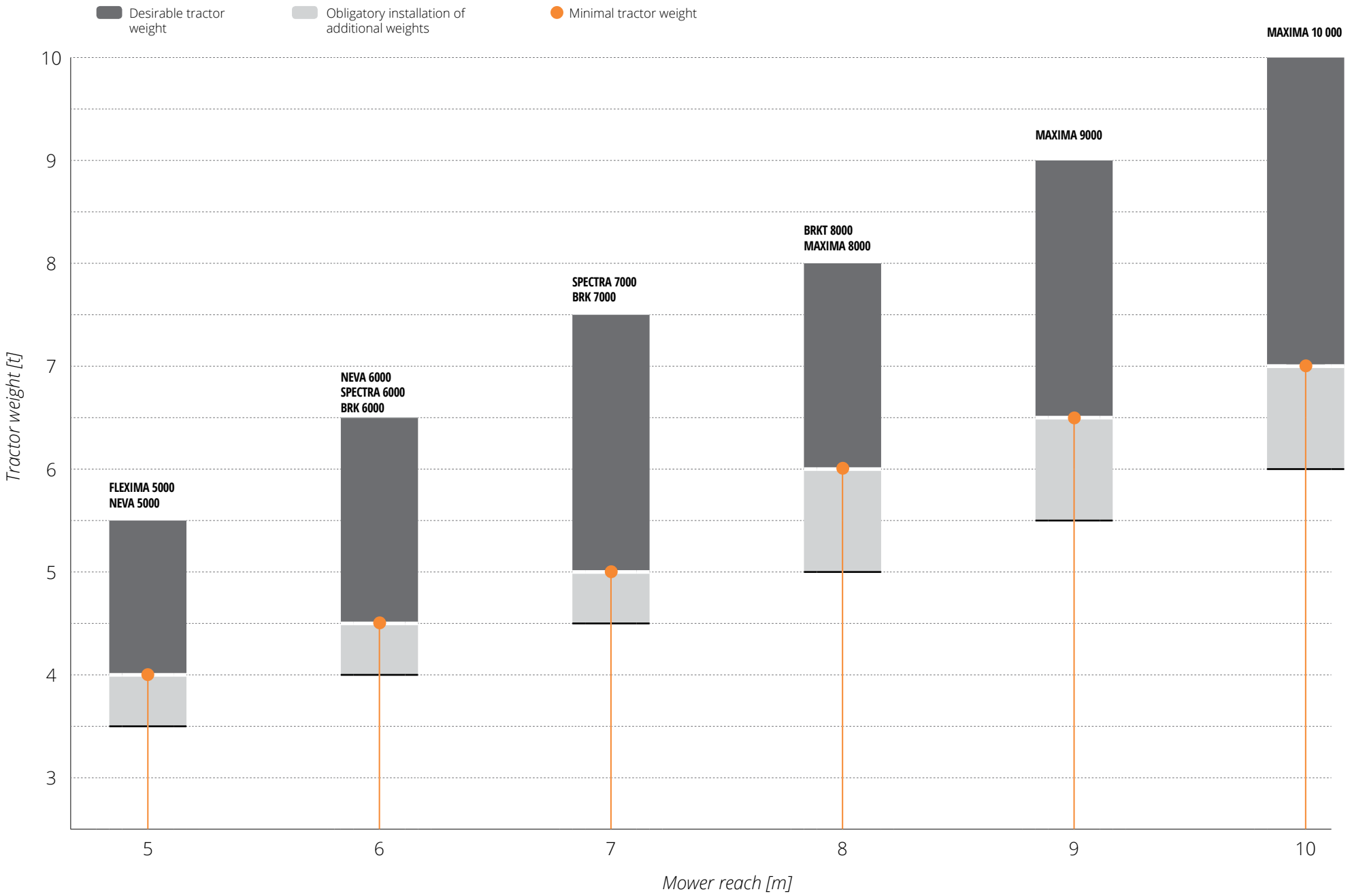

RASCO CRANE MOWERS

Efficient solution for all kinds of vegetation

RASCO product program of professional crane mowers includes mowers for all types of tractors, multi-purpose and small utility vehicles. The construction of hydraulic crane arms is adjusted to different reach lengths, and the working tools and attachments are adjusted to the type of vegetation and the function they are performing.

The choice of one of the crane mowers from the RASCO product program depends on the intended purpose and the vehicle on which the mower is installed. For the most challenging terrains that require a large reach of the operating head, RASCO offers BRK, BRKT and MAXIMA models of lateral tractor mowers with the reach of 6 – 10 metres. For less demanding terrains where a large reach is not the priority, it is possible to select between the front PRK and PRKV mowers for multi-purpose vehicles and combined construction vehicles, and rear end FLEXIMA, NEVA and SPECTRA mowers designed for the installation on tractors. Each crane mower can be equipped with a wide range of working tools and attachments, starting from TORNADO and HYDRA mowing heads, over SRG branch cutters and KAN tools for cleaning and profiling ditches, to the BM side brush for removing vegetation by the side of roads.

All RASCO devices for summer maintenance are created for efficient, simple and safe removal of vegetation by the side of roads and watercourses, and the production quality and robustness are a guarantee of their durability.

RANSCO
RANSCO
HRVATSKA

EFFICIENCY

Simple control of hydraulic crane arms, visibility of the operating head, relief system for easier following of uneven terrain and the operating head floating position system are the key elements which enable fast operation of RASCO crane mowers without compromising the quality of mowing.

A wide range of hydraulic crane arms, with the length of as much as 10 metres in some models, enables the use of RASCO crane mowers even on the most demanding terrains.

Hydraulic system adapted to the vehicle enables the reduction of fuel consumption.

SAFETY

Multiple safety mechanisms, such as the removal and weight relief of crane arms and the operating head floating position, enable RASCO crane mowers safe passage over obstacles on the mowed terrain.

Vehicles on which RASCO crane mowers are installed are clearly marked, and in the transport position the crane arms and attachments are located in such a way as not to disturb the driver or other traffic participants.

Mowing heads for RASCO crane mowers are designed and constructed in accordance with the valid EU standards related to the safety and efficiency of using this type of device.

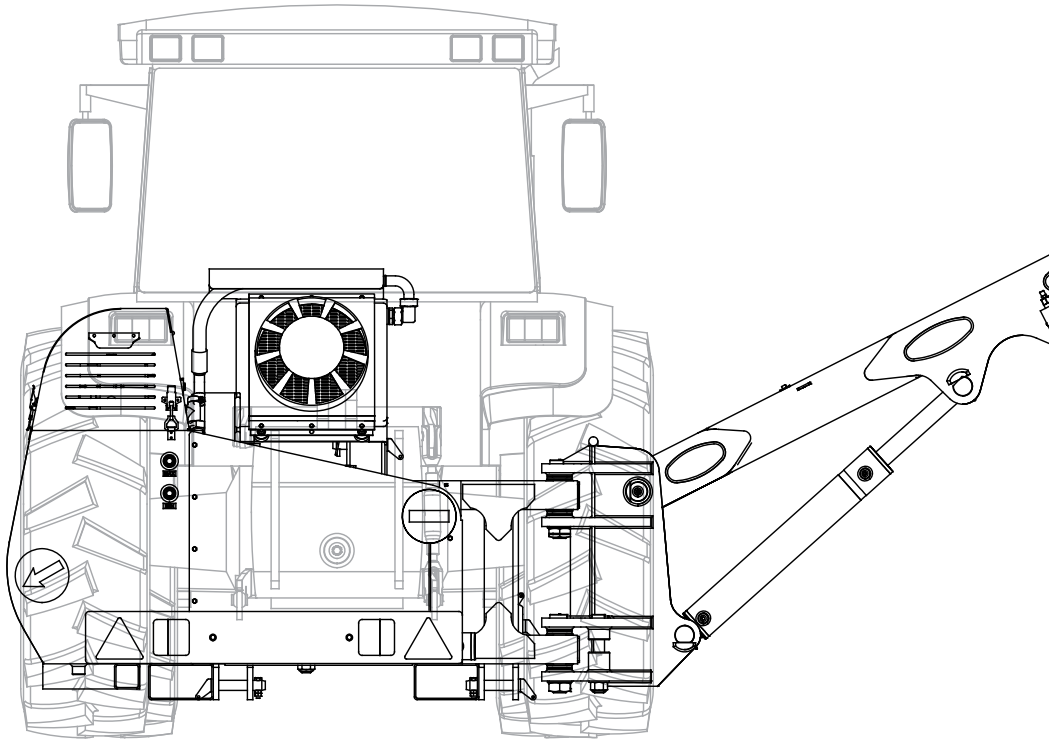

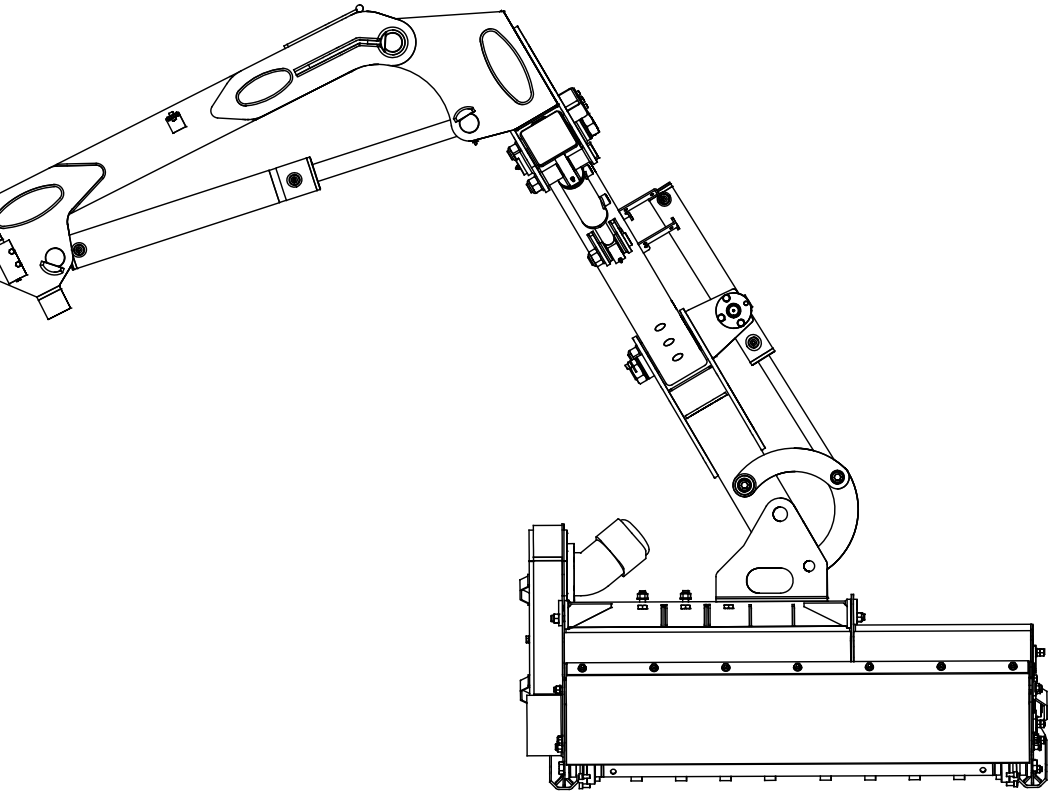

SIMPLICITY

RASCO crane mowers can be simply and quickly installed and demounted from various types of vehicles by using a mower supporting cart.

The ergonomic design of control systems enables the user precise control over crane arms and working tools.

The purpose of RASCO crane mower can be changed easily due to the quick and simple replacement of working tools.

DURABILITY

Hydraulic arms of RASCO crane mowers are made from high quality steel materials, which, in addition to proportional control, eliminating unnecessary hitches and strain, ensure the durability of the device.

Completely integrated production process of RASCO crane mowers, which begins with raw metal and ends with the final product, serves as a guarantee of their quality and durability.

Optimally designed, dimensioned and cooled hydraulic system, which includes axial piston pumps and oil cooler, enables the mower's continuous operation for long periods of time, even during the hottest summer days.

1 Steering

Simple and quick, performed directly from the vehicle cabin. Provides complete control over the device, eliminates mower twitches and enables constant and stable operation with complete comfort for the operator.

2 Hydraulic aggregate

Provides the necessary power for mower crane hands steering and for the head drive operating. It is powered by the engine of the vehicle to which the mower is installed.

3 Crane arms

Robust and firm, they are made from high quality steel, with the reach dependant on the mower type. They enable exceptional work performance and serve as the universal support of different working tools.

4 Oil cooler

Situated next to the oil tank, it prevents overheating and enables the maintenance of an optimal temperature of the hydraulic oil, reducing the possibility of damage to the hydraulic components, and thus extending the device's lifespan.

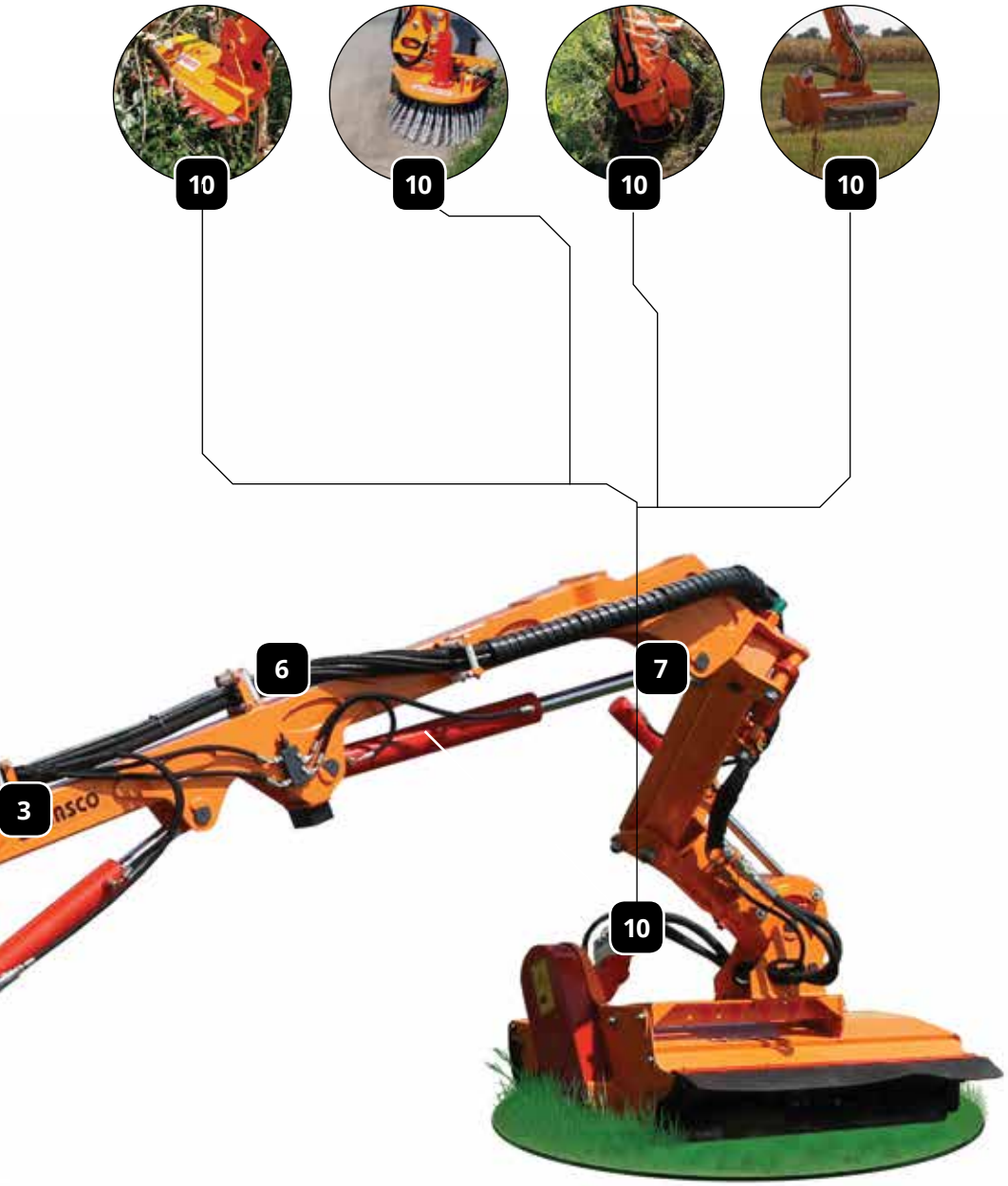

5 Supporting frame

Serves for the mounting of the crane mower on the vehicle chassis. It is available in various designs depending on the place where the mower is installed (on the front, side or rear end of the vehicle).

6 Relief system

Enables good control over the uneven terrain on which the mowing is performed, without the operator's reaction. This enables fast and safe operation and reduces the load on the mower's hydraulic and mechanical construction, thus extending the lifespan of the device.

7 Rotating mechanism

Hydraulic cylinder which enables rotation of the crane mower into the working position. It also has the function of a safety element in case the working tool encounters an obstacle.

8 Rear signalization

Enables a good visibility of the crane mower and vehicle to which it is mounted, and offers a high degree of safety for the user and all other traffic participants.

9 Storage outside the season

This is made easier through the use of a supporting cart that enables simple mounting and demounting of the mower. When it is not used, the cart protects the mower and the surface to which it is placed from damage.

10 Working tools and attachments

They are easy to replace, and their wide selection offers the possibility of use on various terrains and for different types of vegetation for each mower.

BRK

Constructed for highly efficient operation

BRK is a robust and strong lateral crane mower designed for demanding mowing work. Due to the high quality steel from which the mower crane arms are made and the reach of 7 metres, it is extremely efficient in maintaining the banks of watercourses and ditches, as well as for the vegetation by the side of open roads.

Safe mowing with the BRK mower at higher speeds is aided by safety hydraulic elements that prevent breaks and damage to the mower when the working tool encounters obstacles, as well as by systems for relief and mower operating head floating position. An advanced control system ensures a fast and efficient use of the mower. In the transport position, the mower is placed on the rear end of the vehicle, which offers good mower and vehicle visibility in traffic, with the support of in-built signalling devices.

Complete mowing efficiency of the BRK mower at higher speeds, without compromising user comfort, is made possible by the special creation of mower crane arms which guarantees the reduction of working vibrations.

CHOICE OF MOWER EQUIPMENT

- Mowing head TORNADO
- Mowing head HYDRA
- Side brush BM
- Ditch cleaner KAN
- Branch cutter SRG
- SPC Control
- FPC Control
- Automatic relief
- Tandem gear pump
- Hydraulic axial piston pump
- Demounting cart
- Additional weight

6000 - 7000 mm

Mounting on the right hand tractor side.

Tractors on which mowers are to be mounted have to comply with necessary conditions of minimal weight and available installation space.

Intended for mowing sides of roads and forest areas where vegetation has to be removed.

BRKT

High efficiency with increased reach

Lateral crane mower BRKT is especially designed for a larger reach in areas that are more difficult to reach. The reach of 8 metres is enabled by an additional telescopic crane arm made from high quality steel resistant to mechanical strain, which guarantees complete reliability during operation.

Safe mowing with the BRKT mower at bigger distances between the working tool and vehicle is aided by safety hydraulic elements that prevent breaks and damage to the mower when the working tool encounters obstacles, as well as by the relief system and floating position system for operating mowing heads. An advanced control system ensures a fast and efficient control over the mower.

In the transport position, the mower is placed on the rear end of the vehicle, which offers good mower and vehicle visibility in traffic, with the support of in-built signalling devices.

Due to an increased reach, the BRKT mower is intended for mounting on heavy tractors, and can be additionally secured by a supporting wheel or weight providing stability for the vehicle during mower use.

CHOICE OF MOWER EQUIPMENT

- Mowing head TORNADO
- Mowing head HYDRA
- Side brush BM
- Ditch cleaner KAN
- Branch cutter SRG
- SPC Control
- FPC Control
- Automatic relief
- Tandem gear pump
- Hydraulic axial piston pump
- Demounting cart
- Additional weight

8 000 mm

Mounting on the right hand tractor side.

Tractors on which mowers are to be installed have to comply with necessary conditions of minimal weight and available installation space.

Intended for mowing the side of roads and ditch networks.

MAXIMA

Maximum reach for most demanding applications

The telescopic lateral crane mower MAXIMA with the reach of up to 10 metres is intended to be mounted on strong and heavy tractors. It is especially designed for cleaning the deepest watercourses and the highest banks. The wide reach is accomplished by using the telescopic system of mower crane arms made from high quality steel that guarantees exceptional durability and reliability in all working conditions.

Complete safety during the use of MAXIMA mowers is guaranteed by several safety elements. Safety hydraulic elements prevent breaks and damage to the mower in cases when the working tool encounters obstacles. A camera is installed on the crane arm in order to ensure good working tool visibility to the user in case of unfavourable mowing angles and large distance from the tractor, while an auxiliary wheel prevents the overturn of working vehicles. In the transport position, the mower is placed on the rear end of the vehicle, which provides for a safe drive, with the aid of in-built signalling devices. The crane arm relief system enables a high mowing speed and adjustment to the terrain configuration, while the floating system adjusts the position of the operating head to the surface level. The oil cooler situated next to the oil tank prevents overheating and extends the lifespan of the device. Advanced proportional control ensures smooth and slight movement of crane arms and the operating head, free from hitches.

The special design of the MAXIMA mower enables simple mowing of inaccessible places in a fast and efficient manner, while many safety elements guarantee complete safety for the user in all working conditions.

CHOICE OF MOWER EQUIPMENT

- Mowing head TORNADO
- Mowing head HYDRA
- FPC Control
- Crane arm camera
- Automatic relief
- Tandem gear pump
- Hydraulic axial piston pump
- Demounting cart
- Additional weight
- Auxiliary wheel

8 000 - 10 000 mm

Mounting on the right hand tractor side.

Tractors on which mowers are to be mounted have to comply with necessary conditions of minimal weight and available installation space.

The basic purpose includes cleaning the deepest watercourses and the highest banks.

Efficiency at work

RASCO'S PRODUCT PROGRAM INCLUDES MOWERS, OPERATING HEADS, AND ATTACHMENTS FOR EFFICIENT MAINTENANCE OF ALL TYPES OF VEGETATION.

RASCO crane mowers are available in three different designs. Lateral tractor mowers are designed for a maximum reach and the most demanding terrains, while the rear and front mowers are suited to average reach lengths. The choice of a mower with an adequate reach and the vehicle suited for its installation and drive accomplishes maximum work efficiency, along with the optimal purchase and maintenance costs.

The choice of working tools represents the second element of efficient operation. All RASCO mowers can be equipped with a wide range of operating heads and attachments for the maintenance of vegetation with the diameter of 100 mm and for profiling and maintaining water irrigation, collection and drainage ditches.

Hydraulic systems of crane mowers are designed for an optimal use of the vehicle's drive power, which accomplishes significant fuel savings during operation.

Regardless of the function for which the crane mower is intended, the mowing quality and speed of the performed work are the key factors for efficiency. RASCO crane mowers are equipped with simple control systems and many safety elements, such as relief and floating position systems, which enable fast operation without compromising the quality of performed work.

Efficient maintenance of vegetation by the side of roads, watercourses and forest paths requires devices with a wide range of reach which are capable to remove different types of vegetation, along with an uncompromised mowing quality. RASCO has an answer to these challenges.

nasco
EW HOLLAND

SPECTRA

High visibility and simple installation

Crane mower SPECTRA is a rear tractor mower designed for reliable and fast mowing. The main feature of the mower is good working tool visibility, due to special kinematics of crane arms which brings the working tool in the user's visual field. This enables fast mowing, along with a high overview of the terrain.

SPECTRA is a mower that was fully designed with the user's needs in mind. Mower control enables fast manipulation of crane arms and maximum control. Crane arm relief system enables vertical following of the terrain, while the floating system adjusts the position of the operating head to the surface level. Oil cooler with optimal dimensions is located next to the oil tank, and serves to prevent the overheating of hydraulic oil and to ensure precise operation of hydraulic components. The hydraulic cylinder protects the crane arm from overload when an obstacle is encountered. In the transport position, the mower is placed on the rear end of the vehicle, which provides for a safe drive, with the aid of in-built signalling devices.

The special manner of designing the crane arms of the SPECTRA mower enables the working tool to be brought in the position before the driver and in his field of vision, thus ensuring a high utilization of device work characteristics. Simple mounting and demounting of the mower frees the tractor for other purposes.

CHOICE OF MOWER EQUIPMENT

- Mowing head TORNADO
- Mowing head HYDRA
- Side brush BM
- Ditch cleaner KAN
- Branch cutter SRG
- SPC Control
- FPC Control
- Automatic relief
- Tandem gear pump
- Hydraulic axial piston pump

6000 - 7000 mm

Mounting on the rear tractor side.

Mounting on tractors of suitable weight.

Easy and precise maintenance of the sides of roads, areas near banks and overgrown forest paths.

FLEXIMA

Simple mower with wide application

The rear tractor crane mower FLEXIMA is intended for performing various tasks of summer maintenance of vegetation. Crane arms are made from high quality steel resistant to mechanical strains and vibrations. Reach of 5 metres enables easy and simple mower control.

Several safety mechanisms guarantee flexibility and complete safety of FLEXIMA mower operation. The construction of crane arms enables simple manipulation and ensures stable and balanced work, which enables the user to fully utilize working characteristics of the device. The crane arm relief system enables a high mowing speed and adjustment to the terrain configuration, while the operating head floating position adjusts its position to the surface level. Oil cooler with optimal dimensions is located next to the oil tank, and serves to prevent the overheating of hydraulic oil and to ensure long-term operation of hydraulic components.

The hydraulic cylinder protects the crane arm from overload when an obstacle is encountered. In the transport position, the mower is placed on the rear end of the vehicle, which provides for a safe drive, with the aid of in-built signalling devices.

Due to its flexibility, FLEXIMA is the ideal choice for populated urban areas. The long articulated mower arm enables the movement of the operating head backwards when encountering an obstacle, which protects the device from damage and ensures comfort for the user.

CHOICE OF MOWER EQUIPMENT

- Mowing head TORNADO
- Side brush BM
- Ditch cleaner KAN
- Branch cutter SRG
- MPC Control
- SPC Control
- Automatic relief
- Hydropneumatic relief
- Multiplier with two tandem gear pumps

5000 mm

Mounting is performed on the rear tractor side.

The mower is mounted on tractors of suitable weight.

Intended for mowing vegetation by the side of roads and forest paths.

NEVA

Rear mower for difficult conditions

Crane mower NEVA is a simple but efficient rear tractor mower. It is designed for efficient mowing on demanding terrains by the side of roads or ditch network, and the fast replacement of different working tools also enables the use of the mower for other kinds of road maintenance.

Numerous mechanisms enable efficient and safe operation of the NEVA mower. The hydraulic cylinder protects the crane arm from overload when an obstacle is encountered. Crane arm relief system enables vertical monitoring of the terrain, while the floating system adjusts the position of the operating head to the surface level. The mower's control system guarantees efficient mowing on all terrains. Oil cooler with optimal dimensions is located next to the oil tank, and serves to prevent the overheating of hydraulic oil and to ensure precise operation of hydraulic components.

In the transport position, the mower is placed on the rear end of the vehicle, which provides for a safe drive, with the aid of in-built signalling devices.

Special design of the NEVA mower enables easy manoeuvring between obstacles and fast arm movement with simple control, which makes NEVA a reliable choice for more demanding terrains and offers complete user comfort.

CHOICE OF MOWER EQUIPMENT

- Mowing head TORNADO
- Mowing head HYDRA
- Side brush BM
- Ditch KAN
- Branch cutter SRG
- SPC Control
- FPC Control
- Automatic relief
- Tandem gear pump
- Hydraulic axial piston pump
- Additional reinforcement of rear tractor leverage
- Mower carrying frame for rear end of tractor

5000 - 6000 mm

Mounting on the rear tractor side.

The mower is mounted on tractors of suitable weight.

Intended for mowing vegetation by the side of roads and drainage ditches.

Safe use

MULTIPLE MECHANISMS PROTECT RASCO CRANE MOWERS AND VEHICLES FROM DAMAGE AND PROVIDE SAFETY TO THE USER.

A range of safety mechanisms protects RASCO crane mowers from collisions with obstacles and excessive load of the operating head on uneven terrains. When encountering obstacles the automatic rotation and operating head floating position systems are automatically activated, rotating the mower's crane arm and raising the operating head, thus preventing damage to the mower construction. The relief system of crane arm weight prevents the working tools and attachments from getting stuck on uneven terrains and guarantees a balanced mowing quality.

Working tools and attachments are designed and constructed in a way that ensures protection of the mower, driver and vehicle from remains of the removed vegetation, blades and other rotating elements. All working tools and attachments are made from especially durable material and have robust construction that minimises the possibility of uncontrolled discharge of dirt, vegetation and rocks during operation.

The vehicles on which the mower is mounted are additionally marked in order to be visible to other traffic participants, and during transport, crane arms and attachments are placed in such a way that does not reduce visibility and overview for the driver of the vehicle on which the mower is mounted.

RASCO crane mowers are equipped with safety mechanisms that protect the driver, mower and vehicle. The main safety elements are the mechanisms for overcoming obstacles, ensuring the visibility of the device and vehicle and the design of working tools and attachments.

PRK

Reliable solution for wide application

PRK is a front crane mower primarily intended for mounting on multi-purpose working vehicles. The reach of 6 metres and a wide selection of working tools enable the mowing and maintenance of vegetation on various surfaces. Mower crane arms are made from high-quality steel resistant to mechanical strains, which guarantees reliability of the working device.

Several mechanisms enable efficient and safe maintenance of green areas with the use of PRK mower. Safety hydraulic elements prevent breaks and damage to the mower in cases when the working tool encounters obstacles. An advanced control system and working tool relief system guarantee safe and balanced operation and good monitoring of the terrain configuration. If necessary, crane arms can be switched from the mowing position on the right side of the vehicle to the left side and vice versa, in just a few simple steps. During transport, the mower is placed above the vehicle cabin, thus enabling good visibility and safety while driving.

Reliable use for a wide range of activities and simple use are guaranteed by excellent visibility of the terrain during mowing due to the mounting of the PRK mower on the front of the vehicle.

CHOICE OF MOWER EQUIPMENT

- Mowing head TORNADO
- Mowing head HYDRA
- Side brush BM
- Ditch cleaner KAN
- Branch cutter SRG
- SPC Control
- FPC Control
- Automatic relief
- Mowing system on both vehicle sides
- Hydraulic aggregate
- Mechanical fixation of the front axle
- Hydraulic fixation of the front axle
- Weight
- Mower transport position rest
- Storage legs

6000 mm

Mounting on the front vehicle side.

Intended for mounting on multi-purpose working vehicles.

Intended for the maintenance of vegetation by the side of roads.

PRKV

Professional device for working machines

The crane mower PRKV is intended for the maintenance of demanding terrains that are harder to access with the use of working machines. It is an ideal choice for maintaining vegetation by the side of roads due to crane arms made from high-quality steel resistant to mechanical strains and the reach of 6 metres.

The PRKV mower can easily and simply pass over obstacles characteristic for uneven terrains with a poor overview. Safety hydraulic elements prevent breaks and damage to the mower in cases when the working tool encounters obstacles.

An advanced control system and relief system guarantee safe and balanced operation and good monitoring of the terrain configuration.

The complete working efficiency of the PRKV mower is ensured by a complete overview of the terrain due to mounting on the front of the working machine, as well as by the high-quality design of mower crane arms.

CHOICE OF MOWER EQUIPMENT

- Mowing head TORNADO
- Mowing head HYDRA
- Side brush BM
- Ditch cleaner KAN
- Branch cutter SRG
- SPC Control
- FPC Control
- Automatic relief
- Hydraulic aggregate
- Storage legs

6000 mm

Mounting on the front vehicle side.

Intended for mounting on working machines.

Numerous working tools and attachments enable multi-purpose use.

Product durability

COMPLETE CONTROL OVER THE MANUFACTURING PROCESS, FROM THE DESIGN TO THE FINAL PRODUCT, AND EXTENSIVE TESTING IN THE HARDEST WORKING CONDITIONS RESULT IN SAFE AND LASTING RASCO MOWERS AND ATTACHMENTS.

Crane arms of RASCO mowers are made from high-quality steel which ensures their durability. The construction and design of arms, combined with proportional control which enables even movement without hitches, guarantee the mower's durability since they restrict the strain of key elements within the planned limits. Beside crane arms, the attachments are also constructed to resist mechanical impacts by solid objects, such as rocks, that they may come across during work.

Reliable and long-term operation of mowers is ensured by proven hydraulic system components (pumps, motors, distributors, cylinders, flexible hydraulic hoses) by the most renowned European manufacturers. Furthermore, the standard equipment includes an optimally dimensioned oil cooler placed by the oil tank. It prevents overheating of the hydraulic oil and ensures reliable operation of hydraulic components and extends the lifespan of the entire hydraulic system.

RASCO crane mowers and attachments are designed for long-term use in the hardest working conditions. The durability is a result of robust construction, high quality of installed elements and optimally designed hydraulic system.

CONTROL

Crane arm control

Advanced systems of crane arm control ensure smooth, balanced and stable device operation. A specially designed pressure relief system of the attached working tool with regard to the surface guarantees continuous and precise monitoring of the terrain configuration, as well as complete work efficiency.

The control system consists of a control unit and an ergonomically shaped joystick which enables safe and efficient work, as well as complete comfort for the operator even during continuous operation in several shifts.

MPC

Mechanical control with the system of manual levers and cables for hydraulic valve control is a good choice for mower control on less demanding terrains with a smaller number of obstacles.

SPC

Selective proportional control enables simple control of the mower crane arm and the attached working tool on more demanding terrains. The control is performed through the use of a joystick, which controls the operating head and the movement of individual cylinders of mower crane arms.

FPC

Full proportional control is intended for controlling mowers on difficult terrains, full of obstacles, requiring continuous manoeuvring of crane arms. Control with the use of a joystick enables quick changes of the crane arm position through the movement of several cylinders with one joystick movement, thus enabling work efficiency and user comfort.

A5

Attachments

The purpose of the RASCO crane mower is defined by the choice of the working tool mounted on crane arms.

HYDRA

IDEAL CHOICE FOR PROFESSIONAL VEGETATION MAINTENANCE

HYDRA is a combined operating head for mowing and fragmenting vegetation thick up to 50 mm. The mowing head housing is made from a special steel resistant to impacts during mowing, which significantly extends the lifespan of the device.

Efficient operation of the HYDRA mowing head is enabled by the design of its key parts. The spiral distribution of blades reduces energy losses, and an increased aperture on the rear end of the head enables high outflow of material, and accordingly, a higher mowing speed. Adjustable front and rear apertures regulate the outflow of mowed material, and the in-built rubber and chain protectors offer protection from an uncontrolled discharge of the mowed material. When working on damp terrains, the HYDRA operating head may be equipped with a supporting roller cleaner that prevents accumulation of material.

Working with the HYDRA operating head is reliable even in the most difficult conditions, due to the precise construction of the massive multifunctional rotor and belt transmission. All rotating elements are balanced and tested with precision after installation, and the belt transmission reduces the influence of rotor and supporting roller vibrations on the mower crane arm.

The operating head HYDRA can be equipped with different types of blades, which enables its adjustment in accordance with the requirements of all types of mowed vegetation.

Mowing head rotor **2Y**

Mowing head rotor **3Y**

Mowing head rotor **RKR 90**

Mowing head rotor **RKR 110**

TORNADO

ROBUST CONSTRUCTION FOR LONG-TERM OPERATION

TORNADO mowing heads are the ideal choice for the maintenance of smaller vegetation. They are constructed with the option of choosing between two types of blades for cutting vegetation of different thickness, and they raise the grass before cutting, which increases mowing efficiency. Specially designed back head aperture enables a quicker discharge of mowed material, and accordingly a higher mowing speed.

Option of blades spiral distribution allows cutting grass with variable direction of rotation and energy saving. Mowing in populated areas requires a high degree of safety during use and minimising an uncontrolled discharge of mowed material.

That is why the front head side is equipped with protection rubber and chains, and a protective rubber curtain is placed on the rear end.

Special construction of the TORNADO operating head enables long-term operation even in the most difficult conditions. The power is transferred from the hydraulic motor to the rotor by means of belt pulleys. In addition to enabling a more precise setting of the rotor revolution speed, the belt transmission also reduces the influence of rotor vibrations on the hydraulic motor and extends its lifespan. The design of the rotor and its precise balancing additionally reduce the influence of vibrations on the mower crane arm, which enables steady and stable operation of the TORNADO operating head.

BM

RELIABLE TOOL FOR WEED CLEANING

The BM brush is intended for removing grass, weeds, and remaining spreading agents by road curbs and flanks.

High efficiency of the BM brush during work is ensured by an integrated mechanism for overcoming obstacles, which prevents crane arm load and simultaneously protects the entire device. Cleaning control is simple due to the advanced control unit for operating the mower on which the BM brush is installed.

For complete reliability during road surface cleaning, the BM brush is protected by rubber which prevents uncontrolled scattering of rocks and grass.

KAN

SIMPLE DITCH CLEANING AND MAINTENANCE

The ditch cleaner KAN is an excellent choice for cleaning and profiling ditches by the side of roads. A high capacity of the hydraulic motor enables fast cleaning and continuous operation without interruptions.

A range of elements guarantees safe and reliable operation of the KAN ditch cleaner even in the most difficult conditions. The depth of cleaning is regulated by a sliding protector, while the installed dirt deflector directs the thrown dirt without endangering immediate surroundings of the working tool. The ditch cleaner knives ensure a uniform ditch profile, and the high-capacity hydraulic motor secures fast cleaning and profiling of ditches.

SRG

EFFICIENT SOLUTION FOR REMOVING THICKER VEGETATION

Branch cutters are a reliable attachment for crane mowers that is indispensable in the maintenance of treetops and removal of young trees. Cutter blades are made from high-quality tool steel that ensures a long device lifespan. Proven hydraulic components installed in the cutter hydraulic system ensure their long-term operation even in the most difficult conditions.

Cutters are operated using the controls of mower crane arms, and the safety elements installed in the crane mower prevent the damage of cutters and the excessive load on crane arms when obstacles are encountered.

SRG offers best results when it is installed on RASCO crane mowers, but it can also be mounted on mowers by other manufacturers.

Simplicity of use

ALL RASCO CRANE MOWERS AND ATTACHMENTS ARE CONSTRUCTED FOR SIMPLE USE AND MAINTENANCE.

The crane mower is controlled directly from the vehicle cabin. Different types of control are available for different types of mowers, from mechanical to electronic selective proportional control (SPC) or fully proportional control (FPC). SPC control prevents sudden twitches of the crane arm, just like FPC control which also enables simultaneous control of more crane mower hydraulic cylinders with a steady operation without hitches.

The hydraulic aggregate and crane arms can be simply mounted and demounted from the vehicle and placed on the supporting cart. By removing the mower, the vehicle may be used for other purposes.

Changing operating heads and attachments on the mower crane arm is fast and simple due to easily replaceable hydraulic couplings and standardized attachment. Because of this, functionality of the crane mower can be changed in just a few minutes, and one device can be used for multiple purposes depending on the type of vegetation or terrain configuration.

Intuitive control systems, easy mounting and demounting of the mower from the vehicle and a fast replacement of working tools represent the elements which jointly contribute to the simplicity of use of RASCO crane mowers.

OTHER EQUIPMENT

Devices for summer road maintenance

Aside from professional crane mowers, the RASCO product program encompasses devices for cleaning and washing public municipal surfaces. The devices enable simple road maintenance during the summer season, but are also compatible with devices used during the winter season.

The MKN brush for road surfaces is a reliable device intended for cleaning streets, roads and large concrete and asphalt surfaces, especially suitable for clearing leftover spreading agents after the winter season. For washing public municipal surfaces, the RASCO range of products offers the PL washer. With the washer, which is used during summer months, the tanks of RASCO LIQUID and SOLID C spreaders can be used as water tanks for washing, thus extending the period of use of spreaders to include summer months in addition to the winter season.

Just like other RASCO products, the brush for road surfaces and the washer are designed and manufactured for efficient, simple, safe and long-term road maintenance.

MKN

For impeccably clean roads

The MKN brush is a flexible device with a wide range of use, from open roads to narrow city streets. Intended for mounting on different types of vehicles, this device is an excellent choice for a simple removal of dirt from road surfaces. With an in-built water tank, waste container and spraying system, the MKN brush is an exceptional road cleaning device.

The efficient operation of the MKN brush is enabled by several mechanisms. A unique axial tilt system adjusts the position of the brush with regard to the cleaned surface. Auxiliary wheels enable a uniform surface pressure of the brush, thus securing a balanced cleaning quality and optimal brush wear. The spraying system prevents the raising of dust during cleaning, while the waste container enables the collection and subsequent disposal of the collected material. Emptying the waste container is simple due to the hydraulic cylinders that enable fast and easy raising and lowering of the container.

The MKN brush is an excellent choice for cleaning roads before and during repair works and applying asphalt layers, or as a simple device for the maintenance of urban areas.

CHOICE OF BRUSH EQUIPMENT

- Hydraulic drive
- Mechanical drive
- Pump and water tank
- Side brush
- Dust container
- Three-point attachment
- Mounting plate

2100 mm

Mounting on the front vehicle side.

Mounting on a wide range of vehicles – tractors, multi-purpose working vehicles, working machines.

It is intended for cleaning streets, roads and large concrete and asphalt surfaces.

PL

Thorough washing of municipal public surfaces

The PL front washer is a device designed for washing municipal public surfaces using high-pressure water. It consists of a front ramp with nozzles, as well as optional controllable lateral „frog“ nozzles and a vertical ramp with nozzles. For thorough cleaning of surfaces that are more difficult to reach, the device can also be equipped with an additional hose with a manual high-pressure washer.

Highly efficient washing is achieved by the position of nozzles on the front ramp, which enables jets of adjacent nozzles to overlap. Controllable lateral „frog“ nozzles enable washing of less accessible surfaces, such as spaces beneath parked vehicles, while the vertical side ramp enables the cleaning of guardrails situated along the edge of the road. The manual high-pressure washer and the 25 m long hose provide easy access to even the most inaccessible parts of surfaces to be cleaned.

The washer is mounted onto the front truck plate. All operations are controlled with a control unit from the vehicle cabin. A high-pressure pump located on the washer makes it possible to use the washer with any water tank, including those of LIQUID and SOLID C spreaders. A winter service vehicle is thus turned into a universal utility vehicle which can be used throughout the year.

CHOICE OF WASHER EQUIPMENT

- Water hose reel with automatic reeling
- Lateral “frog” nozzles
- Lateral washing ramp for traffic barriers
- Storage legs

3065 – 3225 mm

50 bar

Mounting on trucks and universal multi-purpose vehicles.

Mounting on the front side of the vehicle.

RASCO
RASCO
RASCO
ORIGINAL PARTS

POST-SALES SUPPORT

Along with a high-quality product, every RASCO solution also offers a fast and reliable post-sales support

Post-sales support is provided by educated people and based on an IT system that guarantees consistent processing of customer claims. All employees in the Customer support department have passed through all manufacturing stages during their career in RASCO and are very well acquainted with the functionality of RASCO machines and equipment. The post-sales team is always ready to respond to all claims and inquiries of RASCO equipment users. A special group of RASCO service experts trains the service staff of RASCO partners across Europe, in order to secure the same level of service in all represented markets.

The educated consulting team with many years of experience is available for any inquiries related to devices, the service team resolves device malfunctions, while spare part warehouses guarantee a minimised time from the occurrence of malfunctions to the return of full device functionality.

Constant focus on customer and partner support for the duration of product lifespan is the key to RASCO's success. This is why resolving malfunctions are followed by a detailed investigation of causes in order to take corrective measures to avoid any future occurrence of such malfunctions. Information gathered from customers is used to improve products and the manufacturing process.

CRANE MOWERS

	Minimal mass of device (kg)*	Operating reach (mm)	Mowing width (mm)	Operating speed (km/h)	Total mower height from the ground (mm)
PRK					
PRK 6000	980	6000	1000 / 1300	0,1 ÷ 8	-
PRKV					
PRKV 6000	980	6000	1000 / 1300	0,1 ÷ 8	-
BRK					
BRK 6000	1500	6000	1000 / 1300 / 1500	0,1 ÷ 8	~ 3100
BRK 7000	1600	7000			~ 3500
BRKT					
BRKT 8000	1650	8000	1000 / 1300 / 1500	0,1 ÷ 8	~ 3700
MAXIMA					
MAXIMA 8000	2800	8000	1000 / 1300 / 1500	0,1 ÷ 8	~ 4250
MAXIMA 9000	3000	9000			
MAXIMA 10 000	3100	10 000			
FLEXIMA					
FLEXIMA 5000	1100	5100	1000 / 1300	0,1 ÷ 8	~ 2750
NEVA					
NEVA 5000	1000	5000	1000 / 1300	0,1 ÷ 8	~ 3230
NEVA 6000	1100	6000			
SPECTRA					
SPECTRA 6000	1250	5500 / 6200	1000 / 1300	0,1 ÷ 8	~ 3500
SPECTRA 7000	1500	6000 / 6800			~ 4000

ATTACHMENTS

	Minimal mass of device (kg)*	Mowing width (mm)	Rotor type
TORNADO			
1000 L	250	1000	Rotor with light blades
1300 L	300	1300	
1500 L	325	1500	
1000 S	300	1000	Rotor with mid-weight blades
1300 S	330	1300	
1500 S	380	1500	
HYDRA			
HYDRA	360 ÷ 380	1300	-

	Minimal mass of device (kg)*	Blade length (mm)	MAX working pressure
SRG			
1400	170	1400	180 bar
1800	190	1800	

	Minimal mass of device (kg)*	Brush diameter (mm)	MAX working pressure	MAX RPM
BM				
BM 600	180	Ø 600	200 bar	220 min^{-1}

	Minimal mass of device (kg)*	Blade rotor diameter (mm)	Max working pressure	MAX RPM
KAN				
KAN 600	205	Ø 600	250 bar	800 min^{-1}

OTHER EQUIPMENT

	Minimal mass of device (kg)*	Total width (mm)	Cleaning width (mm)	Brush diameter (mm)
MKN				
MKN 2000	450	2380	2100	Ø 600 / Ø 178

	Minimal mass of device (kg)*	Max working pressure	Total width (mm)	Clearance width (mm)	Rotation angle
PL					
PL 3.0	450	50 bar	3065 - 3225	2385	30°

* Mass of fully configured device depends on chosen options.

RASCO reserves the right to change the characteristics and specifications of products listed in this catalogue without notice. All content is provided for informational purpose and cannot be used for other purposes.

REV 4 - 2/2017

REDSKAPSSYSTEM FÖR ÖKAD LÖNSAMHET

AB Mähler & Söner Hotingsvägen 40, 880 51 Rossön
Tel 0624-512 350 | **Fax** 0624-200 50 | **E-post** info@mahlers.se
Webb www.mahlers.se | **FB** www.mahlers.se/facebook